ENGINE COWL ASSEMBLY - CUMMINS

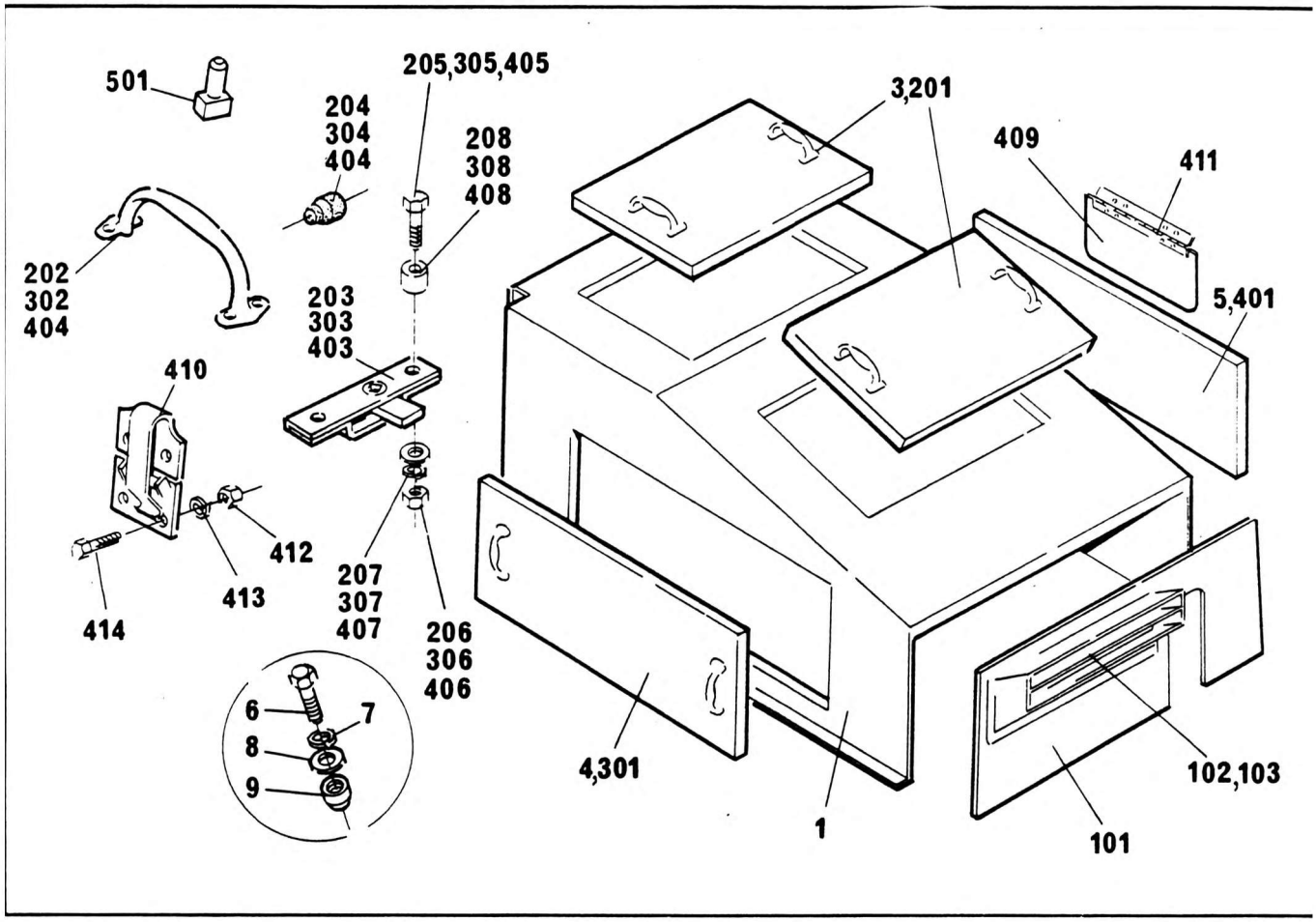

NO.	PART NO.	QTY.	DESCRIPTION
1	6-535-990150	1	Engine Cowl
2	6-679-991620	1	Panel Assy Rear Incl. Items 101 - 103
3 +	6-392-990208	2	Door Assy Top Incl. Items 201 - 208
4 +	6-392-990234	1	Door Assy Side Incl. Items 301-308, 501
5 +	6-392-990235	1	Door Assy Side Incl. Items 401 - 414
6	7-126-151250	11	Bolt M6 x 25 Long
7	7-951-150210	11	Washer Spring M6
8	7-951-150014	11	Washer Plain M6
9	7069108	11	Hankbush M6
101	6-679-991626	1	Panel Rear
102	6-679-991627	1	Panel Grill
103	501741	12	Rivet
201	6-392-990209	1	Door Handle
202	7-511-990001	2	Handle
203	8739257	2	Lock Budget
204	7-195-000031	8	Bumper Rubber
205	7040018	12	Screw
206	7060103	12	Nut 2BA
207	7067203	12	Washer Spring 3/16" Dia.
208	8301674	4	Spacer
301	6-392-990236	1	Door Side (LH)
302	7-511-990001	2	Handle
303	8739257	2	Lock Budget
304	7-195-000031	8	Bumper Rubber
305	7040018	12	Screw 2BA x ¾" Long
306	7060103	12	Nut
307	7-950-100050	12	Washer Spring 3/16" Dia.
308	8301674	4	Spacer
401	6-392-990238	1	Door RH
402	7-511-990011	2	Handle
403	8739257	2	Lock Budget
404	7-195-000031	8	Rubber Bumper
405	7040018	12	Screw 2BA x ¾" Long
406	7060103	12	Nut 2BA
407	7-950-100050	12	Washer Spring
408	8301674	4	Spacer
409	6-258-000575	1	Cover
410	7-834-000059	2	Spring
411	6-519-000065	1	Hinge
412	7-660-100032	8	Nut 3/16" UNF
413	7-950-100000	8	Washer Spring
414	7-101-100410	8	Screw
501	6-689-990256	4	Location Pin

6-535-990149
Issue No. 00